ITEM	QTY.	PART NO.	DESCRIPTION
1	1	85-259	KEY-WOODRUFF-SHAFT
2	1	86-152	UPPER HUB & SHAFT ASSEMBLY
3	1	SSHC #8-32X1/2	SCREW-SOCKET CAP
4	1	85-236	SHAFT SPACER
5	1	86-166	BEARING HOUSING ASSEMBLY
6	1	85-270	FLANGE BEARING-UPPER
7	2	85-116	BUSHING - PIN BLOCK

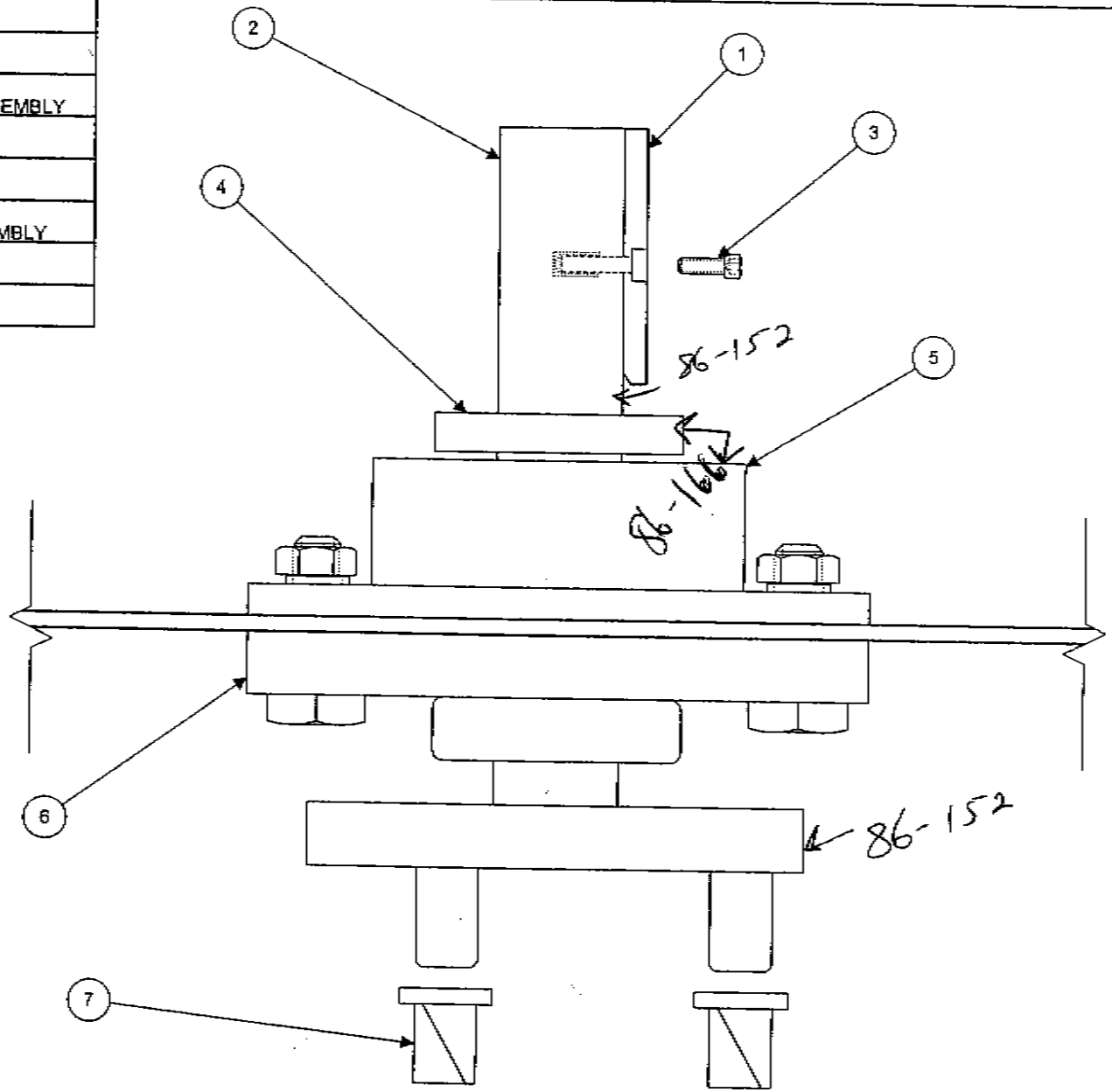

CONTROLLED

REV.	DESCRIPTION	DATE	BY

THESE DRAWINGS AND SPECIFICATIONS ARE THE PROPERTY OF AND PROPRIETARY TO PHILIPS CSS INC. AND ARE NOT TO BE DISCLOSED, REPRODUCED, COPIED OR USED AS THE BASIS OF MANUFACTURE OR SALE OF APPARATUS AND / OR DEVICES, OR OTHERWISE WITHOUT PHILIPS' PRIOR WRITTEN CONSENT.

Phillips CSS Inc
7041 Orchard
Dearborn, MI 48126

86-152/86-166

DRAWING TITLE: UPPER HUB & SHAFT ASSEMBLY W/BEARINGS

DATE	MODEL:	ECN #:
3/31/99	ST	
DRAWING NUMBER: CS-1006	PAGE 1 OF 1	REV: 0

	P/N	DESCRIPTION	QTY.
4	85-213	SPRING - COMPRESSION- RETURN - SOLENOID	1
	85-215	WIRE - LINKAGE - PIVOT ARM - ST	1
	86-113	LOCK PLATE ASSEMBLY - HIGH - LE - ST	1
	86-133	PIVOT & ROLLER ARM ASSEMBLY - HIGH - LE - ST	1
1	86-141	SOLENOID ASSEMBLY	1
3	86-147	LOCKING BAR ASSEMBLY - ST	1
	SRHM#10-24X1	SCREW - MACHINE - PAN - #10 UNC x 1	2
	NH#10-24	NUT - MACHINE SCREW - #10 UNC	2
	WL#10 SPLIT	WASHER - HELICAL SPRING - REGULAR - #10	2
	85-178	WASHER - THRUST - 3/8 x 3/4 x 1/16	2
	85-177	WASHER - THRUST - 5/8 x 1 x 1/16	2
	PC3/32X1/2	PIN - COTTER - 3/32 x 1/2	1
	PC3/32X1	PIN - COTTER - 3/32 x 1	1

DRAWING NUMBER: 86-128 REV: 4

ECN NUMBER: 00-089

CONTROLLED

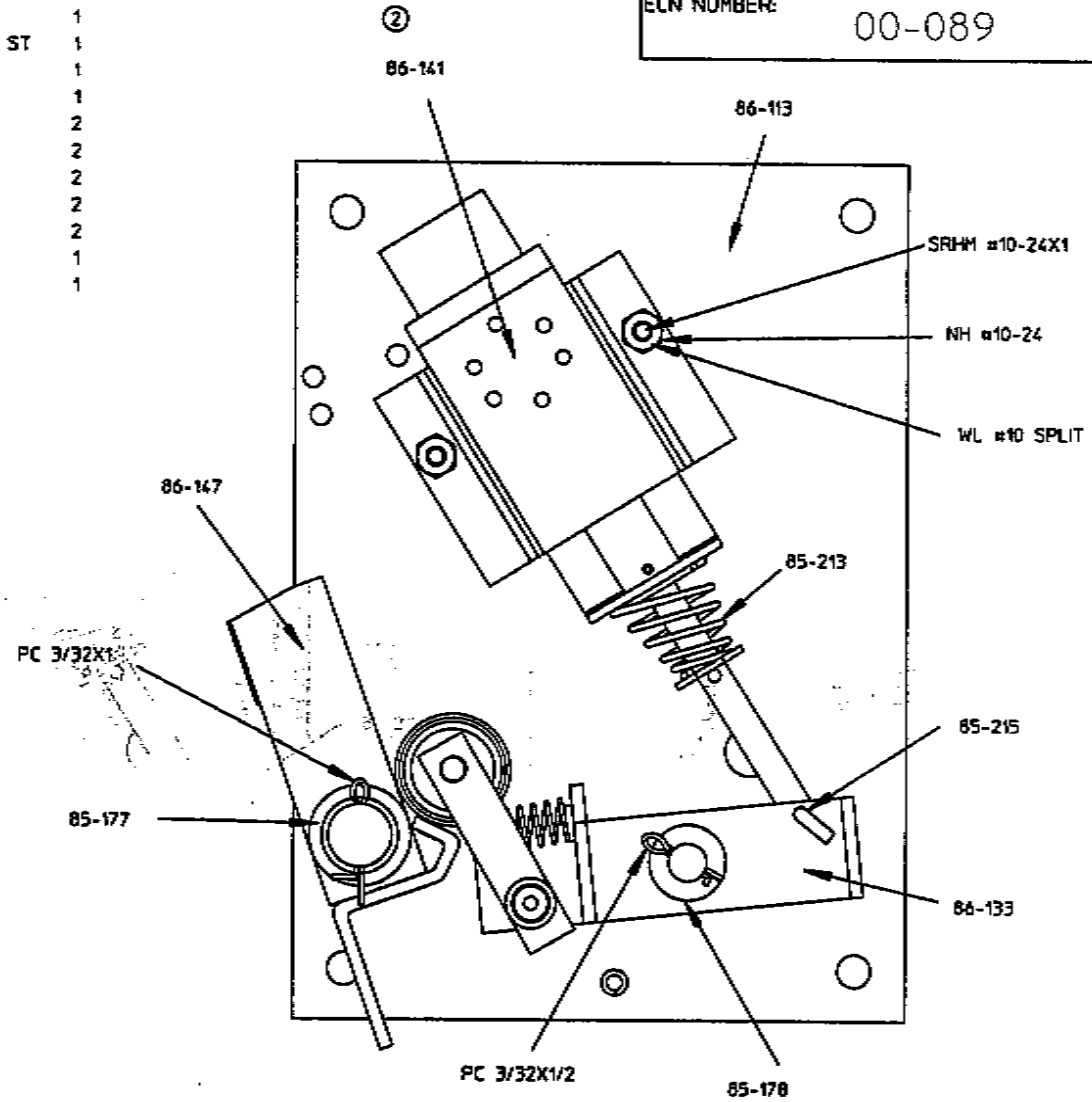

MATERIAL: **********

FINISH: ****

REVISIONS

REV.	DESCRIPTION	BY	DATE
1	UPDATE HARDWARE PART NUMBER DESIGNATIONS	GVB	02/19/99
2	RE-DRAWN AND ELIMINATED ISOMETRIC VIEWS. 86-141 WAS 86-137.	GLS	07/14/99
3	Revised 86-147 Assembly	GVB	03/13/00
4	ADDED 85-213 IDENTIFICATION	CLG	05/22/00

THESE DRAWINGS & SPECIFICATIONS ARE THE PROPERTY OF AND PROPRIETARY TO PHILIPS INDUSTRIES, INC. AND ARE NOT TO BE DISCLOSED, REPRODUCED, COPIED OR USED AS THE BASIS OF MANUFACTURE OR SALE OF APPARATUS AND/OR DEVICES, OR OTHERWISE WITHOUT PHILIPS' PRIOR WRITTEN CONSENT.

ALL DIMENSIONS ARE IN INCHES UNLESS SPECIFIED

TOLERANCE UNLESS SPECIFIED

0.0	±	0.060
0.00	±	0.030
0.000	±	0.015
0.0000	±	0.005
ANGULAR	±	0.5°

DRAWN BY/DATE: GLS 07/14/99

CHECKED BY/DATE: GVB 07/14/99

www.TurnstileParts.com

DRAWING TITLE: LOCKING MECHANISM ASSEMBLY - HIGH - FAIL-LOCK

SIZE:	MODEL:	DRAWING NUMBER:	REV:
A	ST	86-128	4

SCALE: # : # ASSEMBLY **-*** SHEET: 1 OF 1

DRAWING NUMBER:	REV:
86-130	2
ECN NUMBER: 00-025	

	P/N	DESCRIPTION	QTY.
	85-215	WIRE - LINKAGE - PIVOT ARM - ST	1
	86-117	LOCK PLATE ASSEMBLY - HIGH - UE - ST	1
	86-135	PIVOT & ROLLER ARM ASSEMBLY - HIGH - UE - ST	1
	86-141	SOLENOID ASSEMBLY - UE - ST	1
(2)	86-147	LOCKING BAR ASSEMBLY - ST	1
	SRHM#10-24X1	SCREW - MACHINE - PAN - #10 UNC x 1	2
	NH#10-24	NUT - MACHINE SCREW - #10 UNC	2
	WL#10 SPLIT	WASHER - HELICAL SPRING - REGULAR - #10	2
	85-176	WASHER - THRUST - 3/8 x 3/4 x 1/16	2
	85-177	WASHER - THRUST - 5/8 x 1 x 1/16	2
	PC3/32X1/2	PIN - COTTER - 3/32 x 1/2	1
	PC3/32X1	PIN - COTTER - 3/32 x 1	1

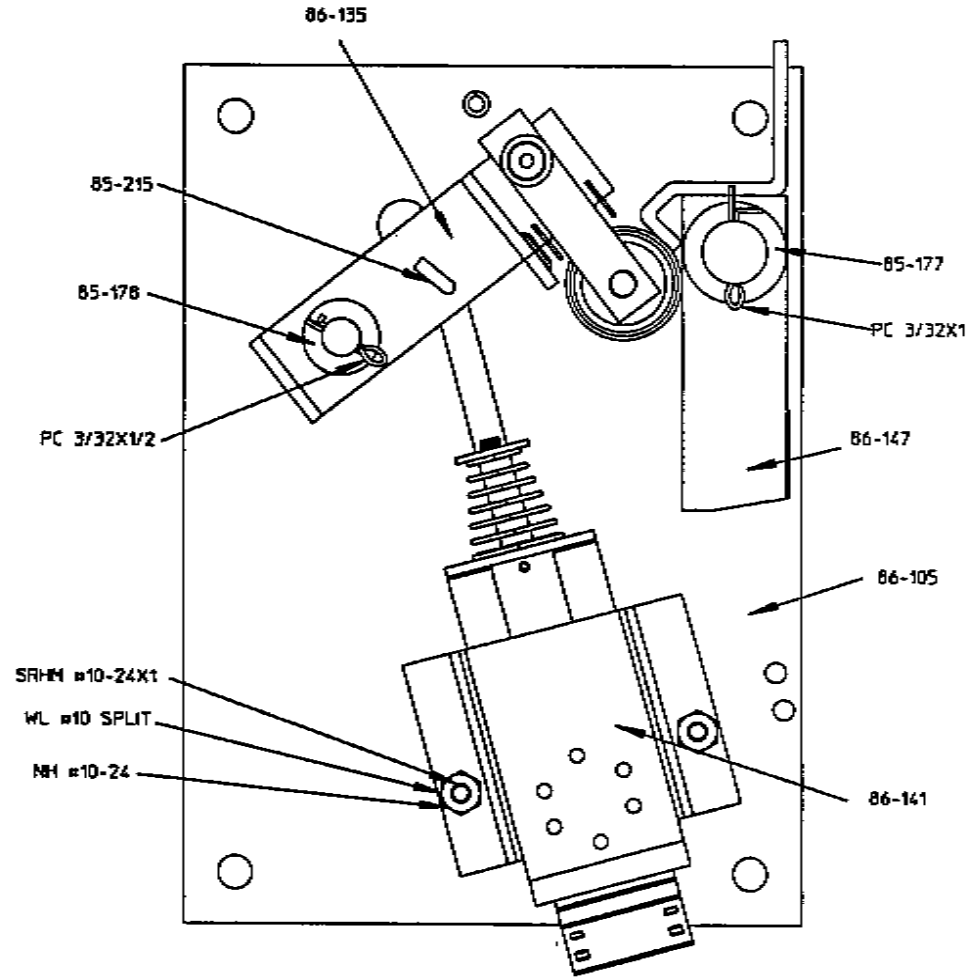

NOTE:
1) 86-135 & 86-147 MUST PIVOT FREELY.

CONTROLLED

MATERIAL: See Chart

FINISH: None

REVISIONS

REV.	DESCRIPTION	BY	DATE
1	Update Hardware Part Number Designations	GVB	02/19/99
2	Eliminate Isometric Views. Revised 86-147 Assembly	GVB	03/15/00

THESE DRAWINGS & SPECIFICATIONS ARE THE PROPERTY OF AND PROPRIETARY TO PHILIPS INDUSTRIES, INC. AND ARE NOT TO BE DISCLOSED, REPRODUCED, COPIED OR USED AS THE BASIS OF MANUFACTURE OR SALE OF APPARATUS AND/OR DEVICES, OR OTHERWISE WITHOUT PHILIPS' PRIOR WRITTEN CONSENT.

ALL DIMENSIONS ARE IN INCHES UNLESS SPECIFIED

TOLERANCE UNLESS SPECIFIED

0.0	±	0.060
0.00	±	0.030
0.000	±	0.015
0.0000	±	0.005
ANGULAR	±	0.5°

DRAWN BY/DATE: DMK 08/08/94

CHECKED BY/DATE: JAK 08/08/94

www.TurnstileParts.com

DRAWING TITLE: LOCKING MECHANISM ASSEMBLY HIGH - UE - ST

SIZE:	MODEL:	DRAWING NUMBER:	REV:
A	ST	86-130	2

SCALE: 1 : 2 | ASSEMBLY **-*** | SHEET: 1 OF 1

DRAWING NUMBER:	86-127	REV: 3
ECN NUMBER:	00-025	

P/N	DESCRIPTION	QTY.
85-215	WIRE - LINKAGE - PIVOT ARM - ST	1
86-105	LOCK PLATE ASSEMBLY - LOW - LE - ST	1
86-132	PIVOT & ROLLER ARM ASSEMBLY - LOW - LE - ST	1
86-141	SOLENOID ASSEMBLY	1
③ 86-147	LOCKING BAR ASSEMBLY - ST	1
① SRHM#10-24X1	SCREW - MACHINE - PAN - #10 UNC x 1	2
NH#10-24	NUT - MACHINE SCREW - #10 UNC	2
WL#10 SPLIT	WASHER - HELICAL SPRING - REGULAR - #10	2
85-178	WASHER - THRUST - 3/8 x 3/4 x 1/16	2
85-177	WASHER - THRUST - 5/8 x 1 x 1/16	2
PC3/32X1/2	PIN - COTTER - 3/32 x 1/2	1
PC3/32/1	PIN - COTTER - 3/32 x 1	1

CONTROLLED

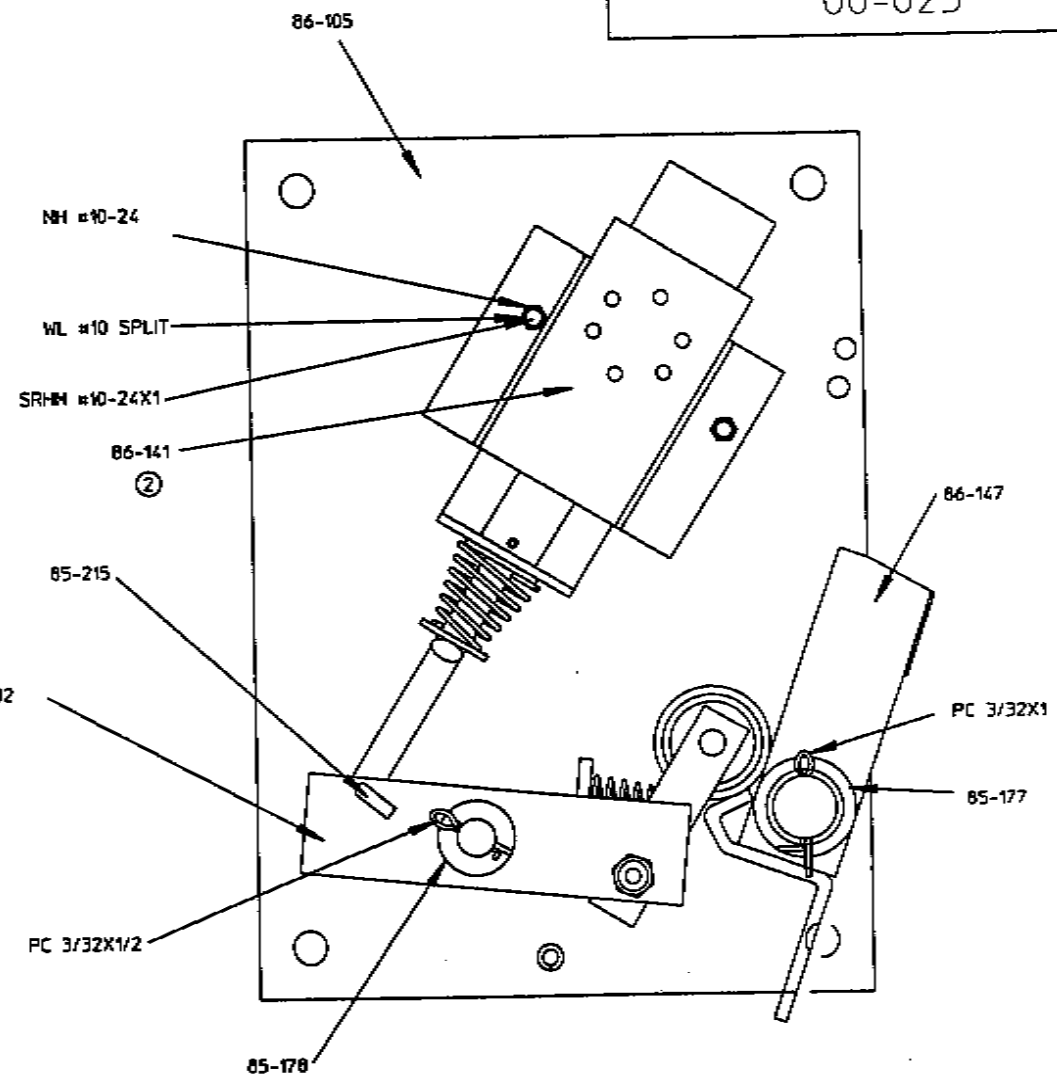

MATERIAL: **********

FINISH: ****

REVISIONS

REV.	DESCRIPTION	BY	DATE
1	UPDATE HARDWARE PART NUMBER DESIGNATIONS	GVB	02/19/99
2	RE-DRAWN AND ELIMINATED ISOMETRIC VIEWS. 86-141 WAS 86-137.	GLS	07/14/99
3	Revised 86-147 Assembly	GVB	03/14/00

ALL DIMENSIONS ARE IN INCHES UNLESS SPECIFIED

TOLERANCE UNLESS SPECIFIED		
0.0	±	0.060
0.00	±	0.030
0.000	±	0.015
0.0000	±	0.005
ANGULAR	±	0.5°

DRAWN BY/DATE: GLS 07/14/99

CHECKED BY/DATE: GVB 07/14/99

www.TurnstileParts.com

DRAWING TITLE: LOCKING MECHANISM ASSEMBLY - LOW - FAIL-LOCK

SIZE:	MODEL:	DRAWING NUMBER:	REV:
A	ST	86-127	3

SCALE: # : # | ASSEMBLY **-*** | SHEET: 1 OF 1

THESE DRAWINGS & SPECIFICATIONS ARE THE PROPERTY OF AND PROPRIETARY TO PHILIPS INDUSTRIES, INC. AND ARE NOT TO BE DISCLOSED, REPRODUCED, COPIED OR USED AS THE BASIS OF MANUFACTURE OR SALE OF APPARATUS AND/OR DEVICES, OR OTHERWISE WITHOUT PHILIPS' PRIOR WRITTEN CONSENT.

DRAWING NUMBER:	REV:
ST32-CHC	3
ECN NUMBER: 00-196	

51-215	PLC Controller
53-523	Rectifer Bridge
53-791	Transformer - 120 VA
53-809	Fuse-1.6a @250VAC Slo-Blo
85-156	Shock Absorber
85-160	Block-Bearing-Plunger Bar
85-245	Spring-Extension-Key Bypass
85-249	Best Lock Cylinder-Key Bypass
85-278	Spring-Compression-Speed Control
85-285	Spring-Compression-Self Centering
85-308	Plunger Bar Roller
BS 1/4	Shoulder Bolt BS 1/4X1-1/4
86-125	Speed Control Assembly
86-136	Tension Block Assembly
86-155	Cable Linkage Assy. - Key By-pass
86-173	Plunger Bar/Limit Switch Assembly
86-177	Plunger Bar w/Roller

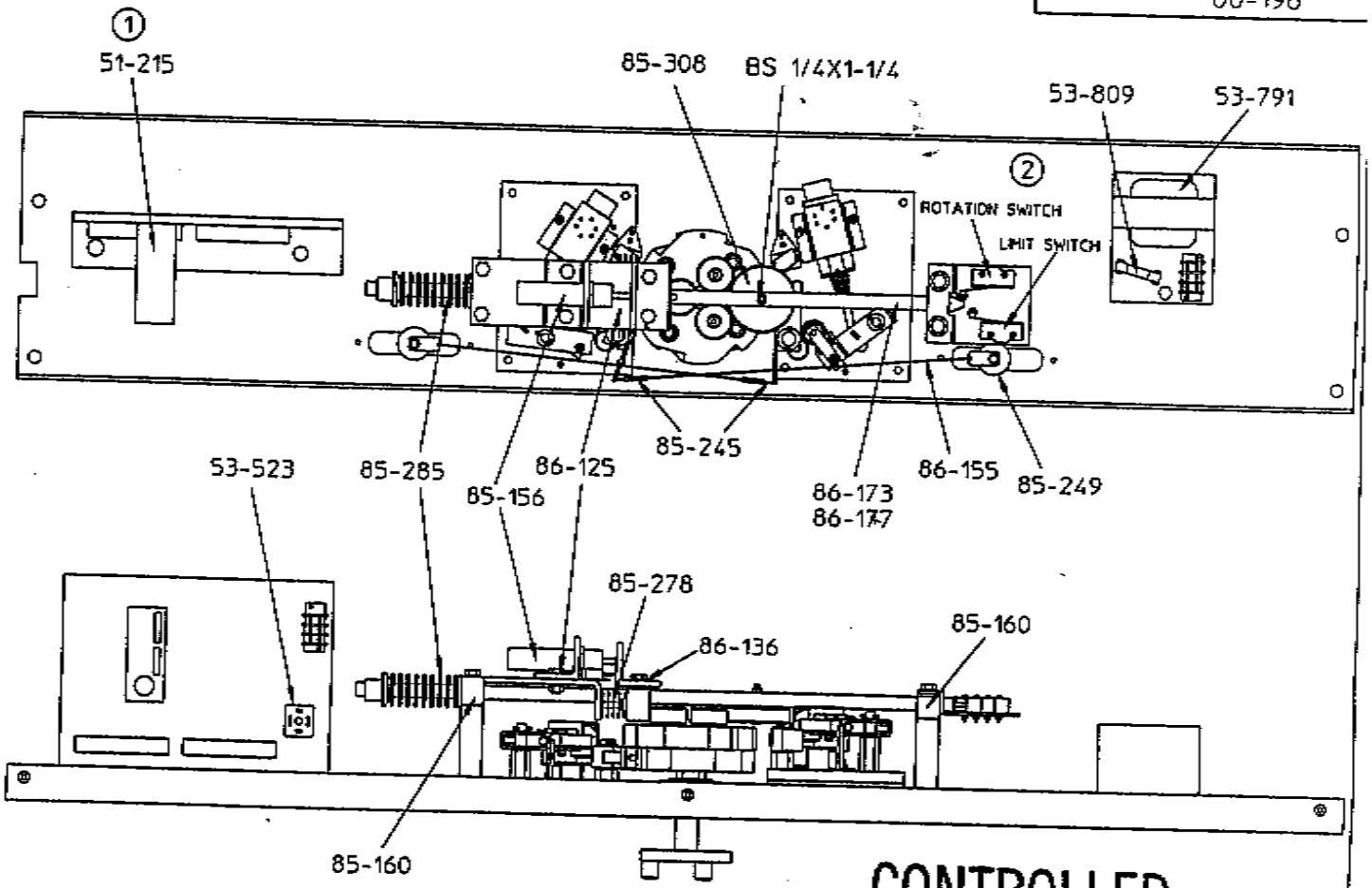

CONTROLLED

REVISIONS

REV.	DESCRIPTION	BY	DATE
1	CHANGED TO PLC FROM 53-101 HC-BOARD @(2) 86-141 WAS 86-137 ON 86-177 LOCKING MECH. ASSEMBLY PLATE.	GLS	07/14/99
2	ADDED LOCKED INDICATION AND INDICATING LIGHT SWITCHES FOR EACH LOCK PLATE ASSEMBLY. CORRECTED POSITION OF ROTATION & LIMIT SWITCHES.	GLS	10/18/99
3	53-872 SWITCH WAS 61-534 SWITCH W/ 61-535 ACTUATOR (SEE PG. 2)	GLS	11/16/00

THESE DRAWINGS & SPECIFICATIONS ARE THE PROPERTY OF AND PROPRIETARY TO PHILIPS INDUSTRIES, INC. AND ARE NOT TO BE DISCLOSED, REPRODUCED, COPIED OR USED AS THE BASIS OF MANUFACTURE OR SALE OF APPARATUS AND/OR DEVICES, OR OTHERWISE WITHOUT PHILIPS' PRIOR WRITTEN CONSENT.

ALL DIMENSIONS ARE IN INCHES UNLESS SPECIFIED

TOLERANCE UNLESS SPECIFIED

0.0	:	0.060
0.00	:	0.030
0.000	:	0.015
0.0000	:	0.005
ANGULAR	:	0.5°

DESIGNED BY/DATE: GVB 07/28/98

CHECKED BY/DATE: GBF 07/28/98

www.TurnstileParts.com

SIZE:	MODEL:	DRAWING NUMBER:	REV:
B	ST	ST32-CHC	3

SCALE: 1 : 5.7 ASSY: N/A SHEET: 1 OF 2

DRAWING NUMBER:	REV:
ST32-CHC	3
ECN NUMBER: 00-196	

21-113 Rotation & Limit Switches - BZ-2RL2-A2
85-214 Spring - Compression - Pivot Arm
85-215 Wire - Linkage - Pivot Arm
85-249 Best Lock Cylinder - Key Bypass
86-114 Roller Bearing Arm Assembly - High
86-120 Ratchet & Roller Assembly - 3 Arm
86-127 Locking Mechanism Assembly - Low - LE
86-130 Locking Mechanism Assembly - High - UE
86-132 Pivot & Roller Arm Assembly - Low - LE
86-135 Pivot & Roller Arm Assembly - High - UE
86-141 Solenoid Assembly
86-147 Locking Bar Assembly
86-155 Cable Linkage Assy. - Key By-pass
86-170 Roller Bearing Arm Assembly - Low
86-179 Switch Plate Assembly

53-872 Switch-(2 Req'd per lock plate) Locked Indication & Ind. Light(s) ② ③

85-265 Switch Bracket

CONTROLLED

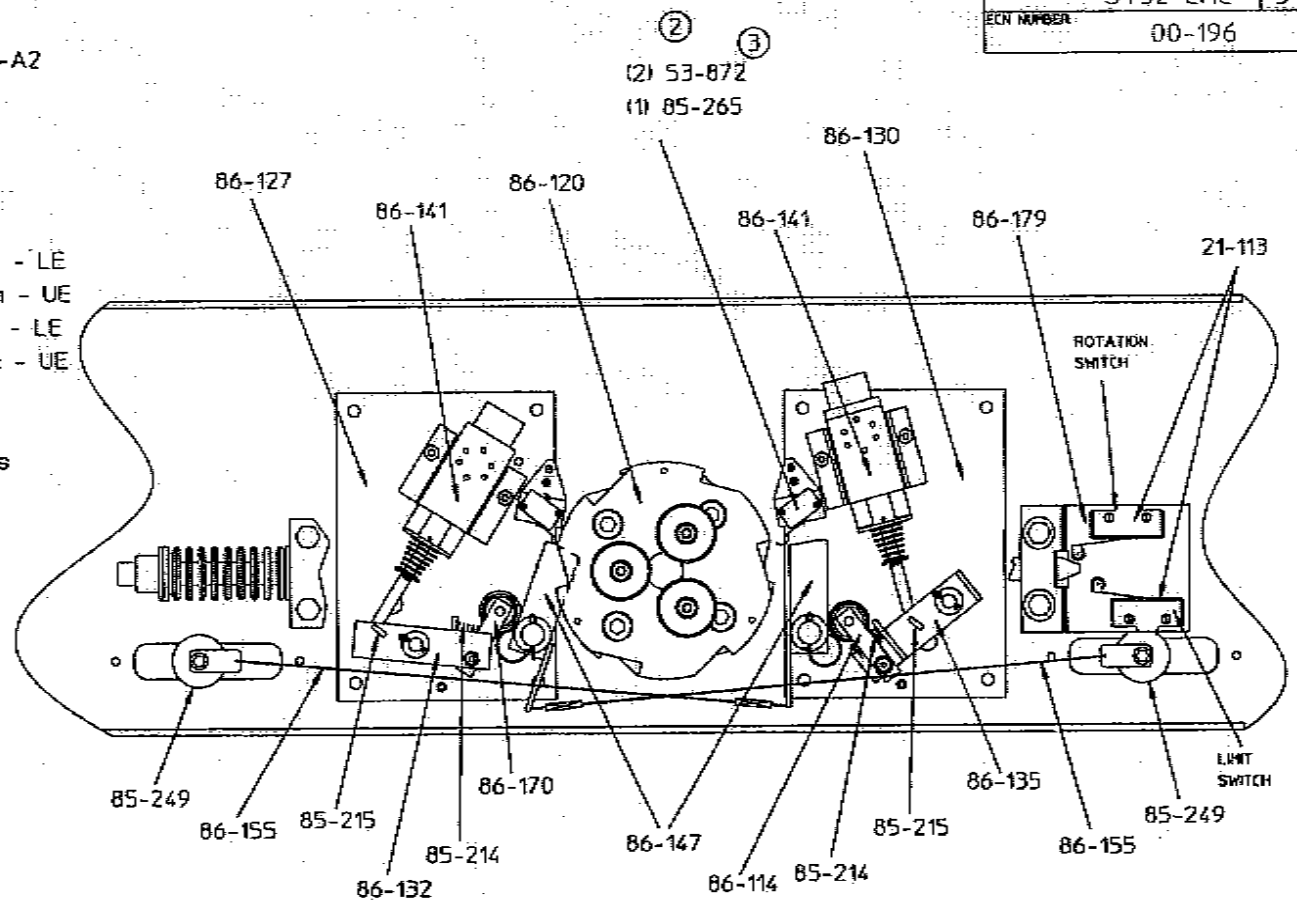

REVISIONS			
REV	DESCRIPTION	BY	DATE
1	SEE PAGE 1	GLS	07/14/99
2	SEE PAGE 1	GLS	10/18/99
3	SEE PAGE 1	GLS	11/16/00

THESE DRAWINGS & SPECIFICATIONS ARE THE PROPERTY OF AND PROPRIETARY TO PHILIPS INDUSTRIES, INC. AND ARE NOT TO BE DISCLOSED, REPRODUCED, COPIED OR USED AS THE BASIS OF MANUFACTURE OR SALE OF APPARATUS WITHOUT PHILIPS' PRIOR WRITTEN CONSENT.

ALL DIMENSIONS ARE IN INCHES UNLESS SPECIFIED

TOLERANCE UNLESS SPECIFIED		
0.0	±	0.060
0.00	±	0.030
0.000	±	0.015
0.0000	±	0.005
ANGULAR	±	0.5°

DESIGNED BY/DATE: GVB 07/28/98
CHECKED BY/DATE: GBF 07/28/98

DRAWING TITLE: www.TurnstileParts.com

SIZE:	MODEL:	DRAWING NUMBER:	REV:
B	ST	ST32-CHC	3
SCALE: 1 : 6.7	ASSY: N/A	SHEET: 2 OF 2	

ITEM	QTY.	PART NO.	DESCRIPTION
1	2	85-116	BUSHING-PIN BLOCK
2	1	86-107	LOWER HUB & SHAFT ASSEMBLY
3	1	85-236	SHAFT SPACER
4	1	85-143	FLANGE BEARING-LOWER
5	1	85-205	MOUNTING PLATE-LOWER BEARING

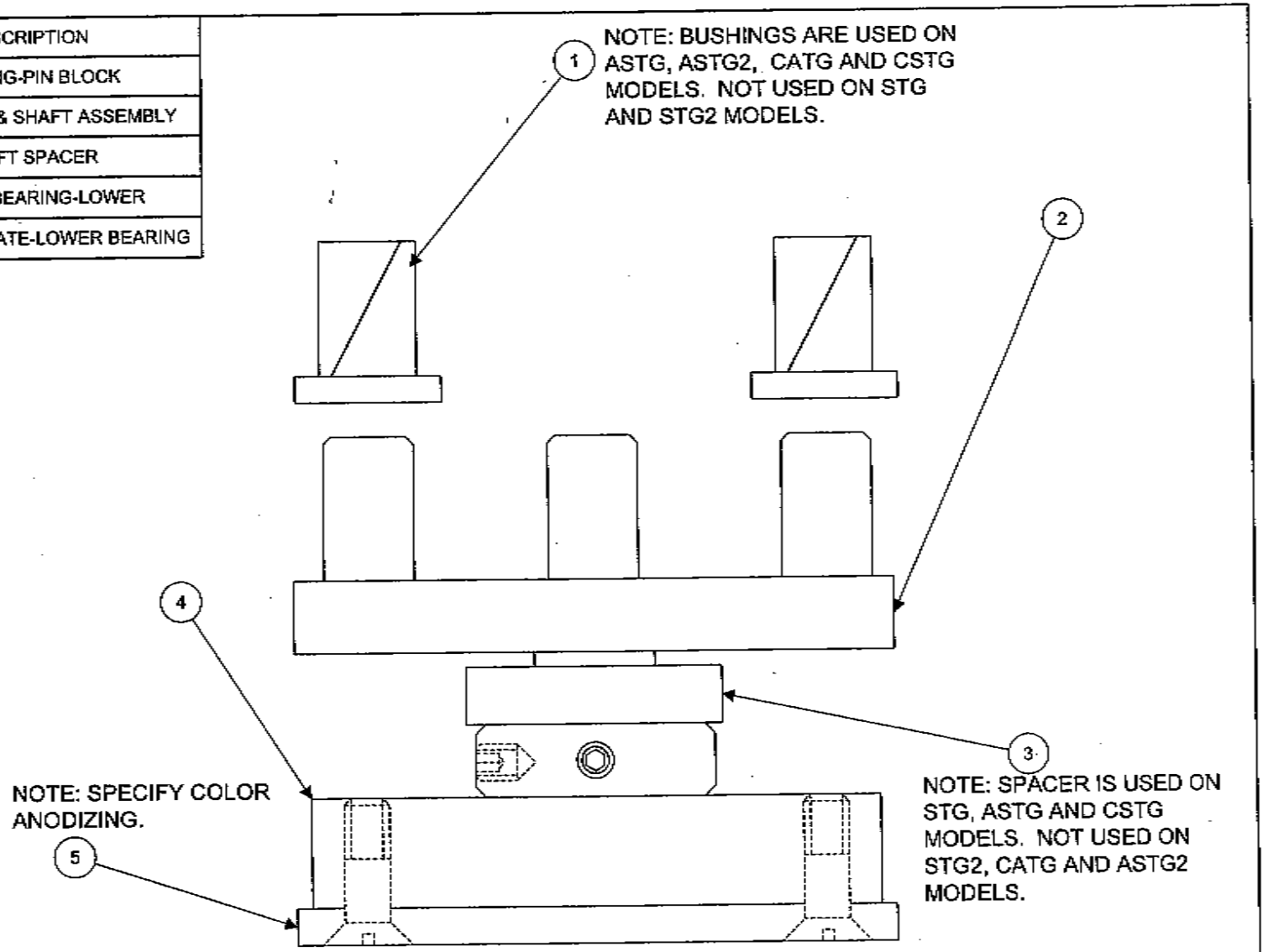

CONTROLLED

NOTE: THIS ENTIRE ASSEMBLY CAN BE ORDERED AS PART # 86-146. SPECIFY COLOR OF ANODIZING OF 85-205 MOUNTING PLATE. (DOES NOT INCLUDE 85-116 BUSHINGS).

REV.	DESCRIPTION	DATE	BY

www.TurnstileParts.com

DRAWING TITLE: LOWER SHAFT & BEARING ASSEMBLY

DATE	MODEL:	ECN #:
3/31/99	ST	

DRAWING NUMBER:	PAGE	REV:
CS-1007	1 OF 1	0

THESE DRAWINGS AND SPECIFICATIONS ARE THE PROPERTY OF AND PROPRIETARY TO PHILIPS CSS INC. AND ARE NOT TO BE DISCLOSED, REPRODUCED, COPIED OR USED AS THE BASIS OF MANUFACTURE OR SALE OF APPARATUS AND / OR DEVICES, OR OTHERWISE WITHOUT PHILIPS' PRIOR WRITTEN CONSENT.